Task-Invariant Assistance using Backdrivable, Powered Orthoses

Gray C. Thomas, Jianping Lin, Nikhil Divekar, Chris Nesler, and Robert D. Gregg

UNIVERSITY OF MICHIGAN

Objectives

- Mobility disabilities
  - Limits one in eight adults [3]
    - Social activity [4]
    - Economic productivity [5]
    - Quality of life [6]
  - Need a partial assist intervention [7]
- ***Backdrivable*** powered orthoses (Fig. 1)
  - Provide torque directly to human joints
  - Do not rigidly control joint positions
  - Offer a mechanical solution
  - But *control* is an open problem
- State of the art control is limited
  - Focuses on periodic tasks
  - Struggles with task transitions
  - ***Task-dependent***, not ***task-invariant***
- Task-invariant control is different
  - Alters dynamics to help in any task
- This poster considers such a control
  - Knee and ankle, stairs and walking
  - "Will the torque help the human?"

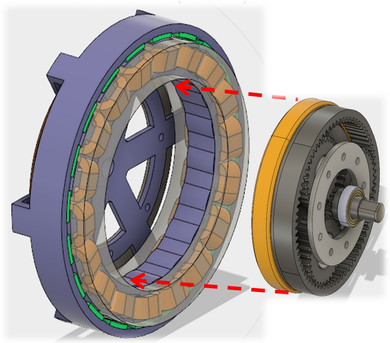

Figure 1. Backdrivable powered orthosis design from the Locomotor Control Systems Lab [1], [2] is lightweight and powerful, yet quiet and energy-efficient. This system uses a compact, backdrivable actuator with a single-stage 7:1 gearbox designed directly into a custom brushless DC motor.

Method

- **Energy shaping** [8]–[15] (Fig. 2)
  - New human–robot dynamics
  - Reduced mass and inertia
  - Senses GRF, joint angles
- Evaluation *in silico*
  - Recorded human movements
  - Simulated control torques
  - Exo—Human Torque comparison

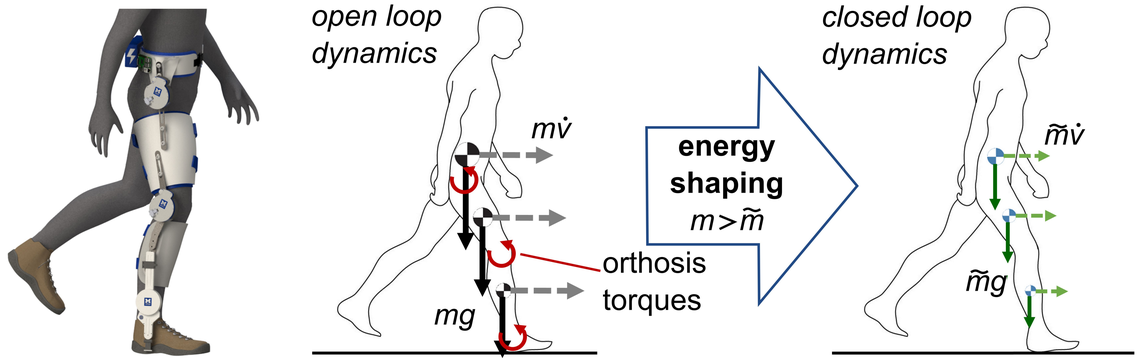

Figure 2. Shaping body energy using backdrivable orthoses. Reducing mass or gravity parameters in the potential energy reduces the perceived weight of the user's body (solid force vectors), whereas reducing mass/inertia in kinetic energy allows the user to accelerate and decelerate with less muscular effort (dashed force vectors).

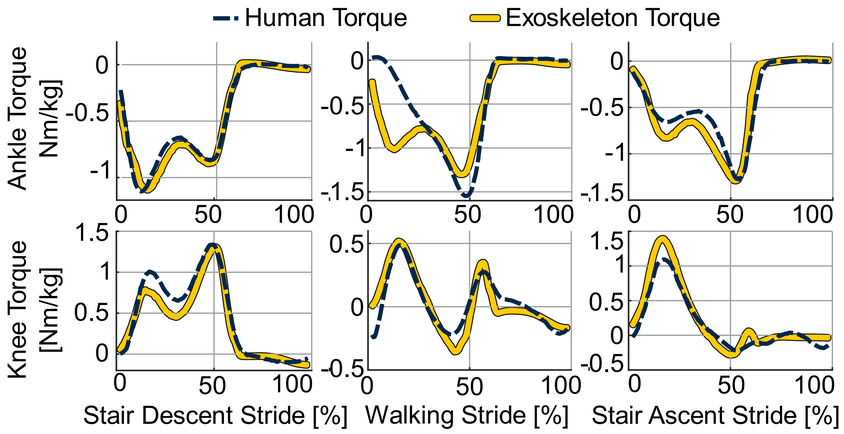

Figure 3. Comparison between an energy-shaping control strategy (exoskeleton torque) and normative human torques [16] across stair descent (left), level walking (center), and stair ascent (right). Exoskeleton (orthosis) torques were generated by inputting human data from [16] into a potential energy shaping control law based on [13]. Exoskeleton torques are shown at same scale as human for comparison but will be scaled down for partial assistance.

Results

- Agreement between human and exoskeleton torque (Fig. 3)
  - Exoskeleton torques shown at 100% human scale
  - For an assistive device, 30% scale would be practical
  - 100% scale plot demonstrates torque profile similarity
  - Providing similar torques helps the human
- Agreement persists across all three tasks
  - Stair descent, level walking, star ascent

Conclusion: The quality of the matching in Fig. 3 demonstrates the viability of task-invariant control using energy shaping, and the potential of backdrivable partial assist orthoses to assist activities of daily living.

Bibliography

[1] H. Zhu, C. Nesler, N. Divekar, M. Ahmad, and R. D. Gregg, "Design and Validation of a Partial-Assist Knee Orthosis with Compact, Backdrivable Actuation," in *IEEE Int. Conf. Rehab. Robot.*, 2019, pp. 917–924.
[2] H. Zhu, C. Nesler, N. Divekar, V. Peddinti, and R. D. Gregg, "Design and Validation of a Backdrivable Powered Knee Orthosis for Partial Assistance of Lower-Limb Musculature," *IEEE Trans. Robot.*, 2020.
[3] "Prevalence of Disability and Disability Type among Adults, United States," *Centers for Disease Control and Prevention*, 2013. .
[4] W. Miller, A. Deathe, M. Speechley, and J. Koval, "The influence of falling, fear of falling, and balance confidence on prosthetic mobility and social activity among individuals with a lower extremity amputation," *Arch. Phys. Med. Rehab.*, vol. 82, no. 9, pp. 1238–1244, 2001.
[5] "Work-Related Musculoskeletal Disorders & Ergonomics," *Centers for Disease Control Prevention*, 2016. .
[6] J. Shafrin, J. Sullivan, D. P. Goldman, and T. M. Gill, "The association between observed mobility and quality of life in the near elderly," *PLoS One*, 2017.
[7] M. Grimmer, R. Riener, C. J. Walsh, and A. Seyfarth, "Mobility related physical and functional losses due to aging and disease-a motivation for lower limb exoskeletons," *J. Neuroeng. Rehabil.*, vol. 16, no. 1, p. 2, 2019.
[8] G. Lv, H. Zhu, T. Elery, L. Li, and R. D. Gregg, "Experimental implementation of underactuated potential energy shaping on a powered ankle-foot orthosis," in *IEEE International Conference on Robotics and Automation*, 2016, pp. 3493–3500.
[9] N. V. Divekar, J. Lin, C. Nesler, and R. D. Gregg, "A Potential Energy Shaping Controller with Ground Reaction Force Feedback for a Multi-Activity Knee-Ankle Exoskeleton," in *International Conference on Biomedical Robotics and Biomechatronics*, 2020.
[10] G. Lv and R. D. Gregg, "Towards total energy shaping control of lower-limb exoskeletons," in *Proceedings of the American Control Conference*, 2017, pp. 4851–4857.
[11] G. Lv and R. D. Gregg, "Underactuated Potential Energy Shaping With Contact Constraints: Application to a Powered Knee-Ankle Orthosis," *IEEE Trans. Control Syst. Technol.*, vol. 26, no. 1, pp. 181–193, 2018.
[12] J. Lin, G. Lv, and R. D. Gregg, "Contact-Invariant Total Energy Shaping Control for Powered Exoskeletons," in *American Control Conference*, 2019, pp. 664–670.
[13] J. Lin, N. Divekar, G. Lv, and R. D. Gregg, "Energy Shaping Control with Virtual Spring and Damper for Powered Exoskeletons," in *IEEE Conference on Decision and Control*, 2019.
[14] M. Yeatman, G. Lv, and R. D. Gregg, "Decentralized Passivity-Based Control with a Generalized Energy Storage Function for Robust Biped Locomotion," *J. Dyn. Syst. Meas. Control*, vol. 141, no. 10, p. 101007, 2019.
[15] G. Lv, H. Zhu, and R. Gregg, "On the design and control of highly backdrivable lower-limb exoskeletons," *IEEE Control Syst. Mag.*, vol. 38, no. 6, pp. 88–113, 2018.
[16] R. Riener, M. Rabuffetti, and C. Frigo, "Stair ascent and descent at different inclinations," *Gait \& posture*, vol. 15, no. 1, pp. 32–44, 2002.